ANATECH ELECTRONICS INC
RF & Microwave Filters & Products

1200-3000 MHz High Pass Filter

Part Number: AE1200H9915

ISO 9001 CERTIFIED

Electrical Specifications

Cutoff Frequency (Fc): 1200 MHz
Passband: 1200-3000 MHz
Passband Insertion Loss : 0.5dB Max.
Passband Return Loss: 14dB Min.
Rejection1: 50 dB Min. @ 30-88 MHz
Rejection2: 55 dB Min. @ 100-164 MHz
Rejection3: 50 dB Min. @ 220-512 MHz
Power Handling: 20 W CW

Mechanical

Mounting Method: Threaded Holes
Connector Type: SMA (F)
Dimensions: 1.0 x 0.38 x 0.38 in

Environmental

Operating Temperature: -25°C to +70°C
Storage Temperature: -60°C to +90°C
Shock: 10 G. 11ms
Vibration: 10 G. 5 to 2000Hz

Outline Drawing:

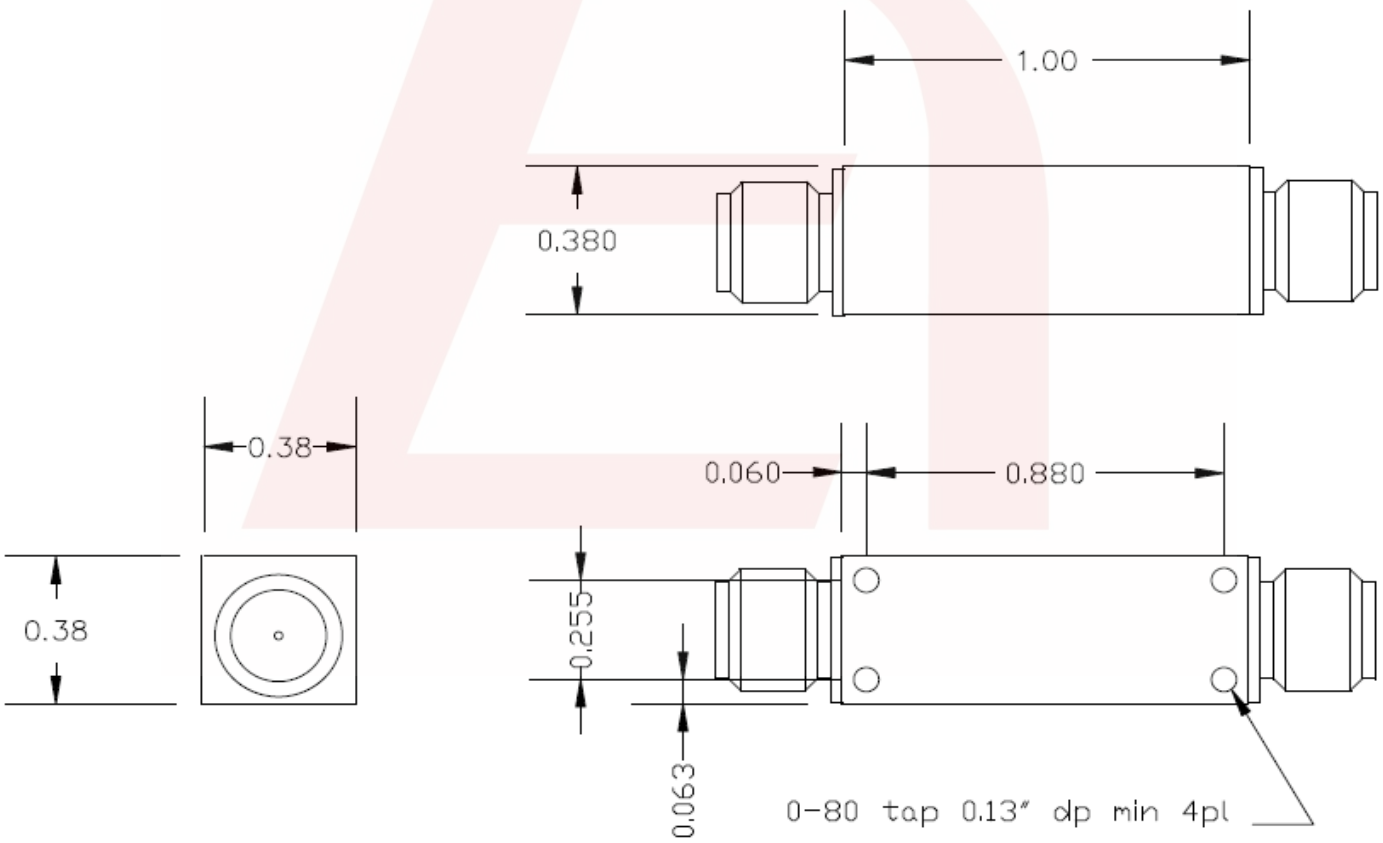

70 Outwater Lane Phone: (973) 772-6262
Garfield, NJ 07026 Fax: (973) 772-6666
Email: sales@anatechelectronics.com
Web: www.anatechelectronics.com

1200-3000 MHz High Pass Filter

Part Number: AE1200H9915

ISO 9001 CERTIFIED

Simulation Plot :

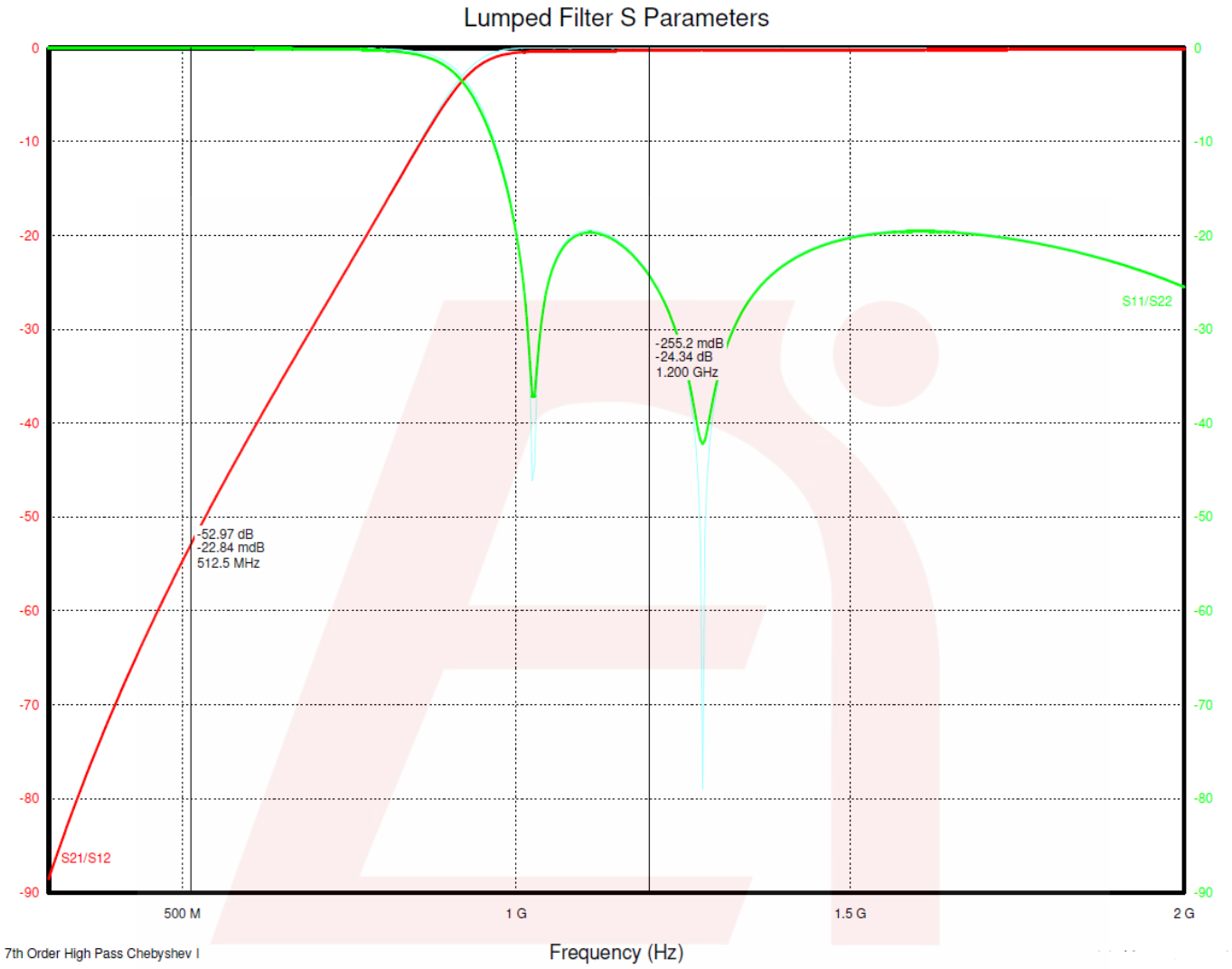

70 Outwater Lane Phone: (973) 772-6262
Garfield, NJ 07026 Fax: (973) 772-6666
Email: sales@anatechelectronics.com
Web: www.anatechelectronics.com