ANATECH ELECTRONICS INC
RF & Microwave Filters & Products

2215.5 / 2287.5 MHz Ceramic Duplexer

Part Number: AM2212-2287D779

ISO 9001 REGISTERED FIRM

Characteristics	Band 1	Band 2
Passband:	2203-2225 MHz	2275-2300 MHz
Bandwidth:	Fo ± 12.5 MHz	Fo ± 12.5 MHz
Passband Return Loss:	15 dB min	15 dB min
Passband Insertion Loss:	20.5 dB max	2.0 dB max
Passband Ripple:	1.0 dB max	1.0 dB max
Input / Output Impedance:	50 Ohms	50 Ohms
Isolation:	50 dB min	50 dB min
Power Handling:	3 W	3 W

Mechanical	
Mounting Method:	SMT
Dimensions:	26.9 x 8.05 x 8.05 mm

Environmental	
Operating Temperature:	-30 to +85 deg.C
Storage Temperature:	-50 to +90 deg.C

This product is RoHs compliant.

Outline Drawing:

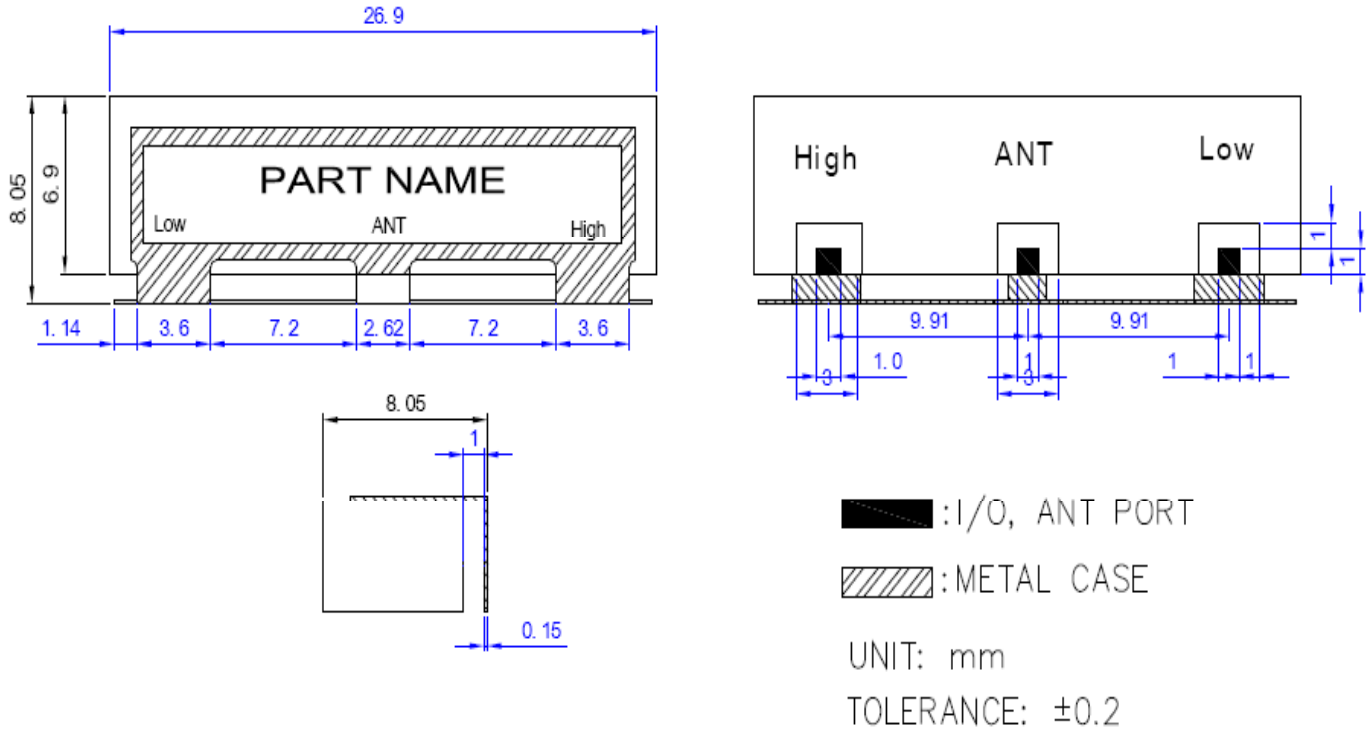

70 Outwater Lane
Garfield, NJ 07026
Phone: (973) 772-4242
Fax : (973) 772-4646
Email: sales@anatechelectronics.com
Web: www.anatechelectronics.com